Electro-voice Baronet Speaker Build

Fred Alexander

Completed March 2020

Found these plans on the internet and decided to try and build a set as I had purchased the Electro-voice speakers in the early ‘70’s for a different set of cabinets. The set of coaxial speakers were actually made for this speaker cabinet.

Electro-Voice® ENGINEERING DATA

SP8B 8-INCH COAXIAL LOUDSPEAKER

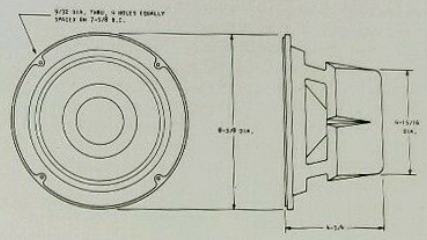

Figure 1 — Dimensions

DESCRIPTION

Incorporating quality features usually found only in larger and more expensive speakers, the SP8B is an ideal speaker for limited-space applications. The Radax coaxial principle is employed to achieve extended high-frequency response beyond the range of ordinary eight-inch speakers. Dispersion is improved as well, providing better spread of sound in the listening area. A large, efficient magnet structure yields high sensitivity and low distortion. Carefully controlled cone characteristics and viscous damped cloth suspension extend low-frequency response for full, satisfying bass reproduction.

INSTALLATION

As with any quality loudspeaker, care should be taken to house the SP8B properly if best results are to be obtained. Excellent results may be achieved by the use of a properly designed bass reflex enclosure. Information on home construction of bass reflex enclosures is available in Technical Bulletin No. 10. Any of the bass reflex enclosures described in numerous articles may be employed, provided they are intended for a speaker of the same size and resonant frequency as the SP8B.

Cut a baffle opening and drill mounting holes as indicated. Use four carriage bolts, nuts and washers, or equivalent; use of woodscrews is not recommended. Secure the speaker to the baffle board just tightly enough to compress the speaker gasket. Excessive tightening is not necessary as the compressible gasket will form an acoustical seal with nominal pressure.

CONNECTIONS

Use No. 18 or larger lamp cord to connect the two terminals on the loudspeakers to the amplifier output. To [illegible] phasing, the speaker T1 terminal should be connected to the 8 ohm amplifier tap; the T2 terminal should be connected to the amplifier common tap. When the speaker cable must be run under carpets or behind moldings, etc., ordinary TV twin lead is satisfactory.

SPECIFICATIONS

Frequency response:	35 – 15,000 Hz
Nominal impedance:	8 ohms
Power handling capacity,	
Program:	20 watts
Peak:	40 watts
Voice coil diameter:	2 inches
Magnet weight:	1 lb., 6 oz. ceramic
Nominal resonance:	60 Hz
EIA sensitivity rating:	47 db
Dimensions:	8-3/8" dia. x 4-3/4" overall depth
Baffle opening:	7-1/8 inches
Net weight:	7 pounds
Mounting:	Four 9/32" holes equally spaced on a 7-5/8" circle

SYSTEM IMPROVEMENT

Electro-Voice Building Block Kits provide a simple method for improving speaker system performance in stride with the budget. An E-V SP8B may be expanded to a deluxe two-way system with the assurance of properly matched components.

Model BB1 high-frequency kit is designed for use with the SP8B full-range speaker. In addition to extending high-frequency response to beyond the limits of audibility, this kit provides more precise definition of VHF waveforms and improved high-frequency dispersion in the listening area, creating good stereo effect over a wider area.

ENGINEERING DATA SP8B 8-INCH COAXIAL LOUDSPEAKER

Electro-voice's description

A high-fidelity loudspeaker enclosure is ordinarily visualized as having generous proportions. There is an outstanding exception, however, the Electro-Voice Baronet. Probably as the aftermath of working with gigantic theater installations, several Electro-Voice engineers started joking about a "midget loudspeaker enclosure" that could be carried under the arm. Just as many a word of truth is oft spoken in jest, a way was found to fulfill this rather contradictory dream, and the result was a small box capable of reproducing tones of up to 16 feet in wavelength!

The physical basis that permitted this seeming incongruity – employing the principle of rear horn loading – was the ability of an air column to be coupled to a corner of a room to form an extension of the speaker horn flare. The loudspeaker rear cone air column in the Baronet started off in a technically correct manner, but like a sawed-off shotgun, it ended abruptly. Just as a charge of buckshot can be given surprising accuracy by slipping a length of pipe over the shotgun barrel, directing the miniature air column issuing from the rear of the Baronet into a corner achieved the same effect. Thus, the walls of the room become a continuation of the abbreviated horn, providing an excellent "folded corner horn" design.

Schematic I had to work with

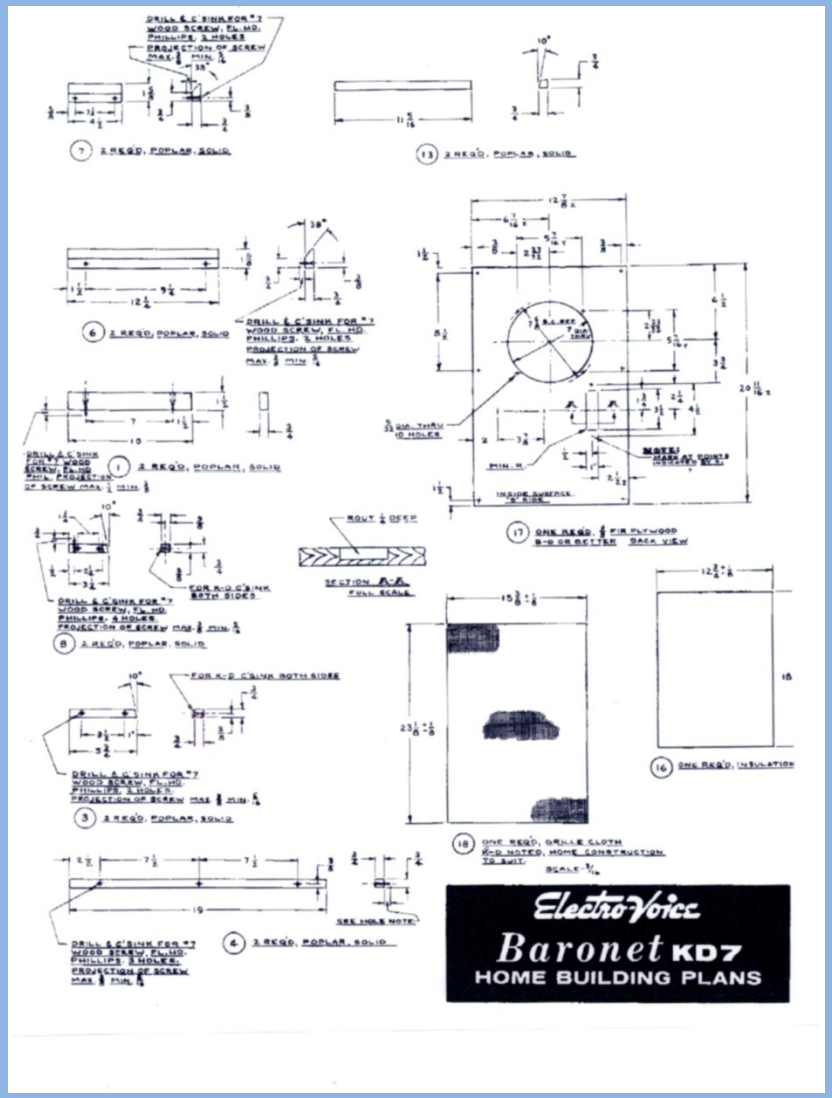

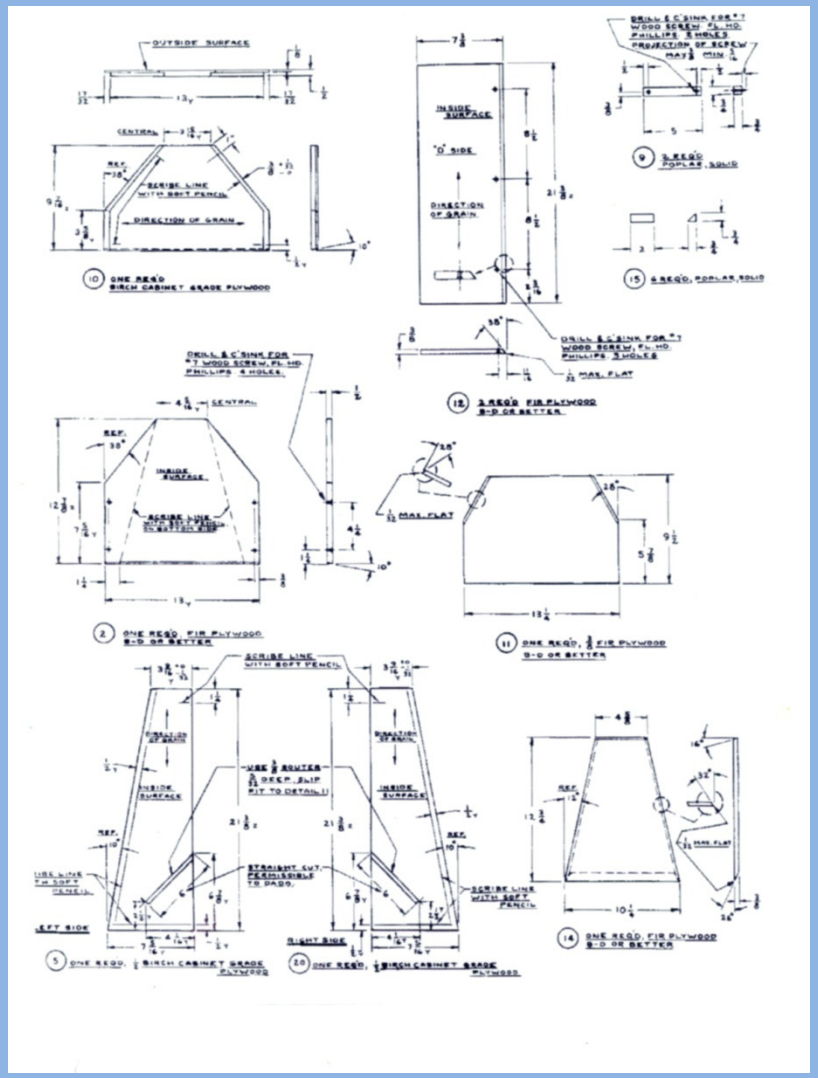

First step was to enlarge plans to a readable size

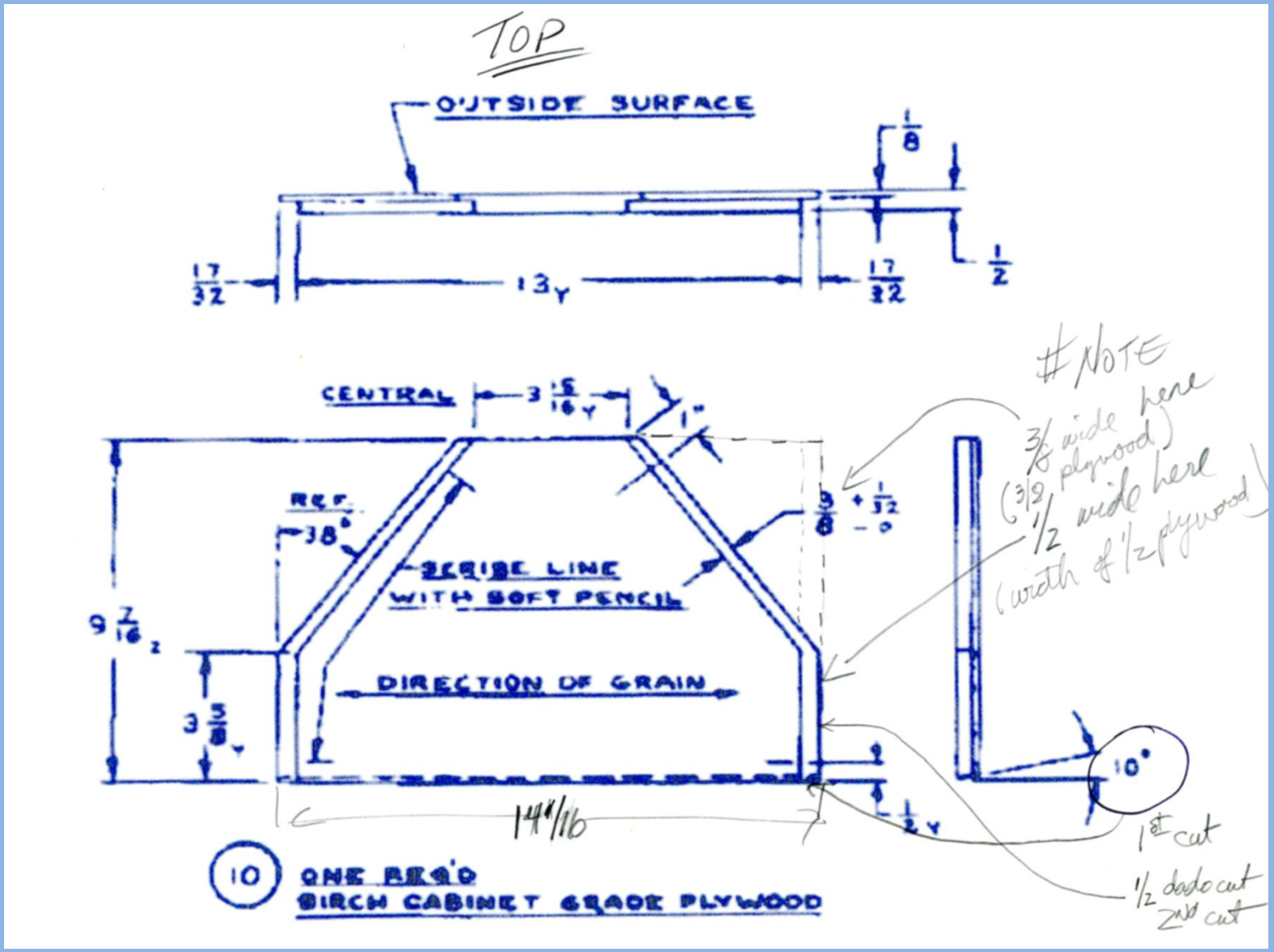

SPEAKER BOTTOM

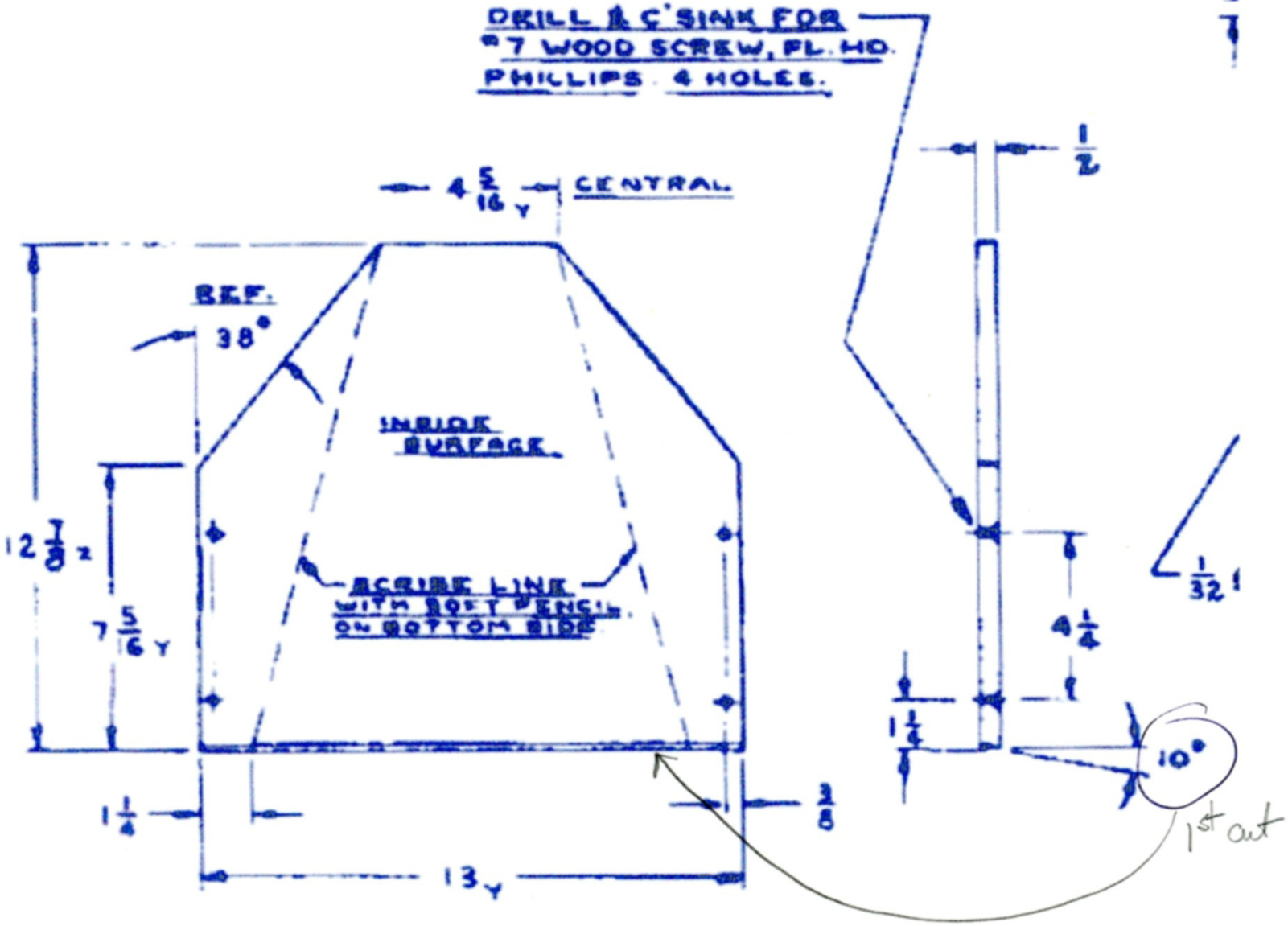

(2) ONE REQ'D. FIR PLYWOOD B-D OR BETTER

FRONT SPEAKER SIDES

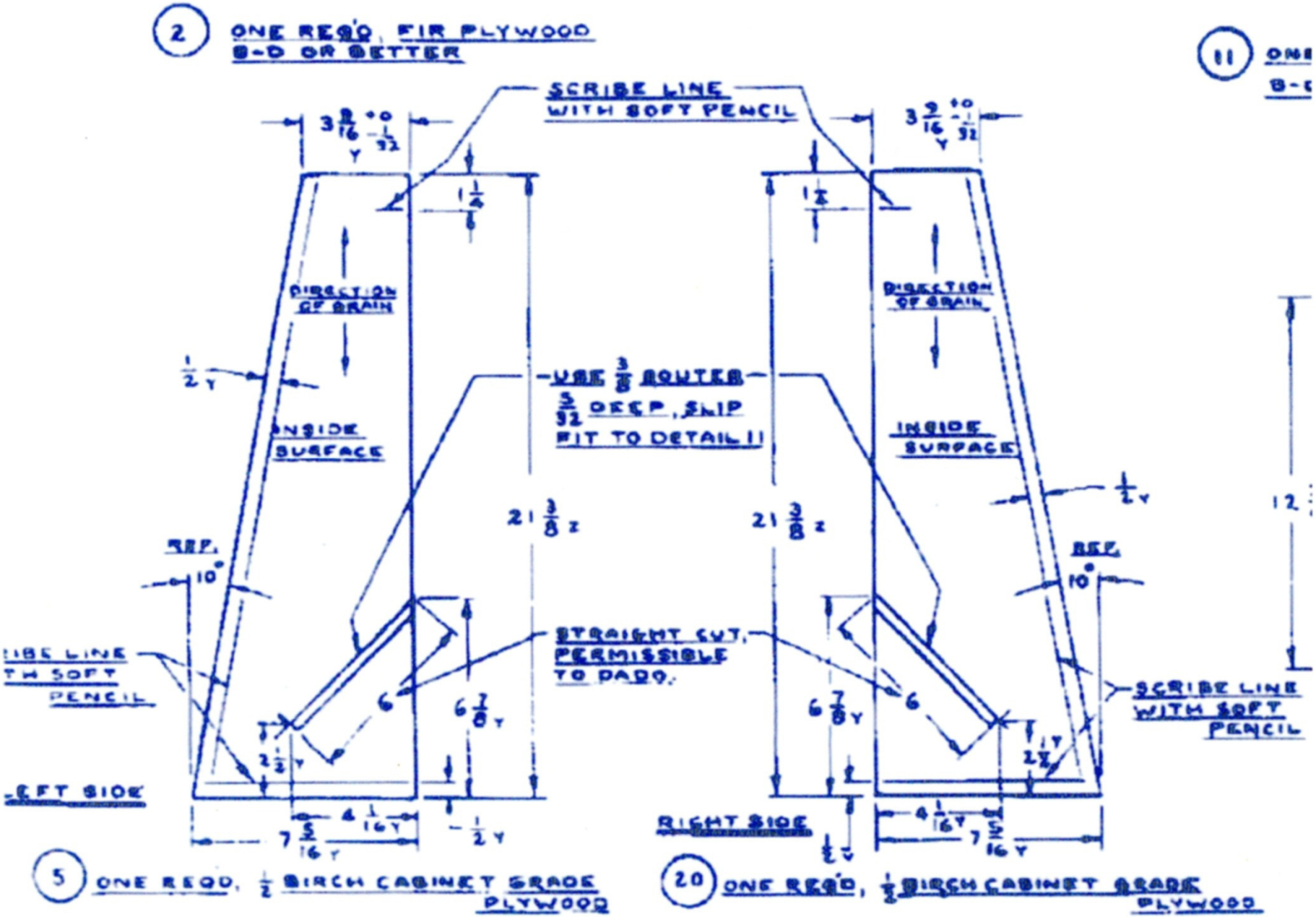

UPPER BAFFLE

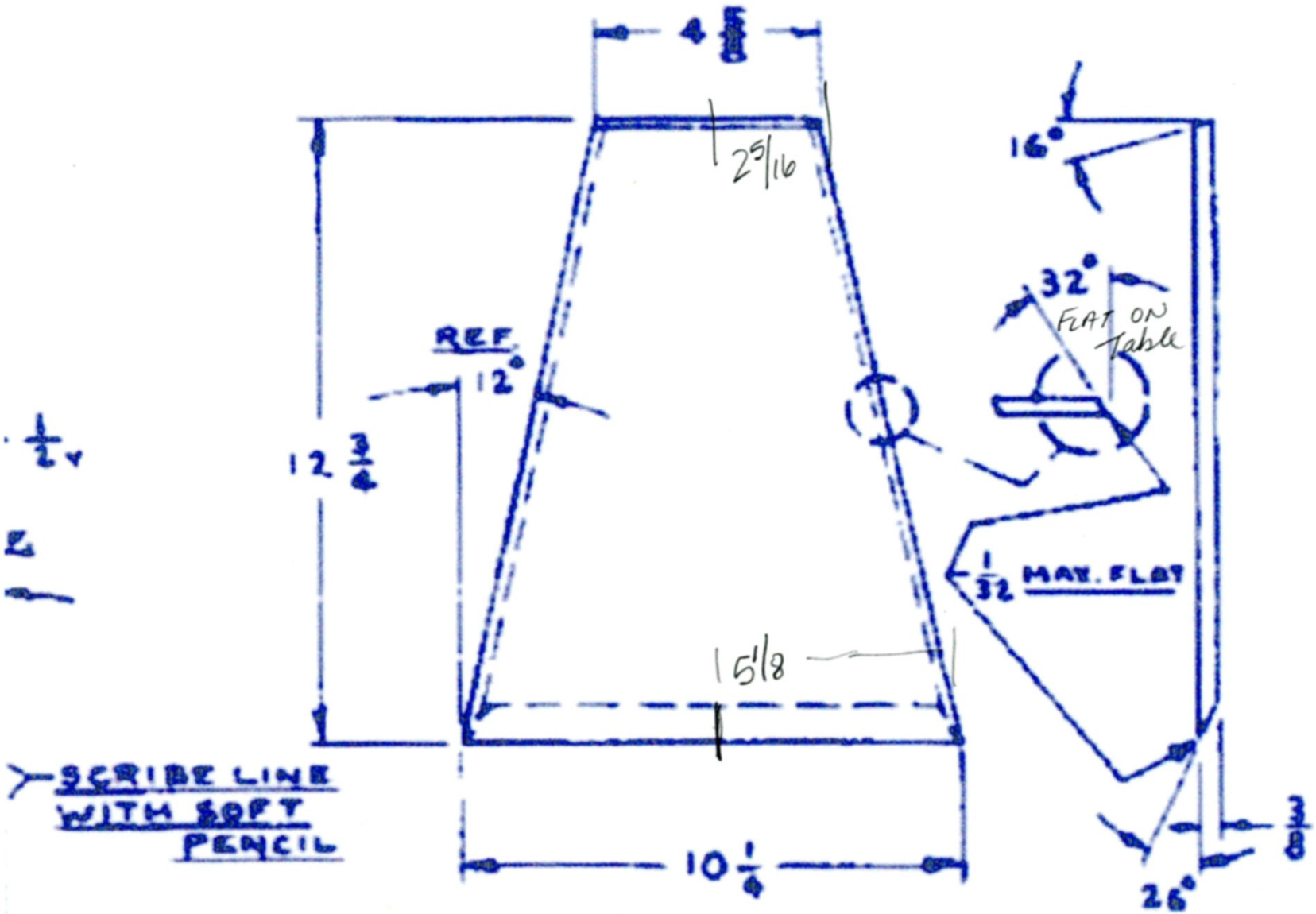

16° ✓
26°
32°

(14) ONE REQ'D, FIR PLYWOOD B-D OR BETTER

REAR SIDES

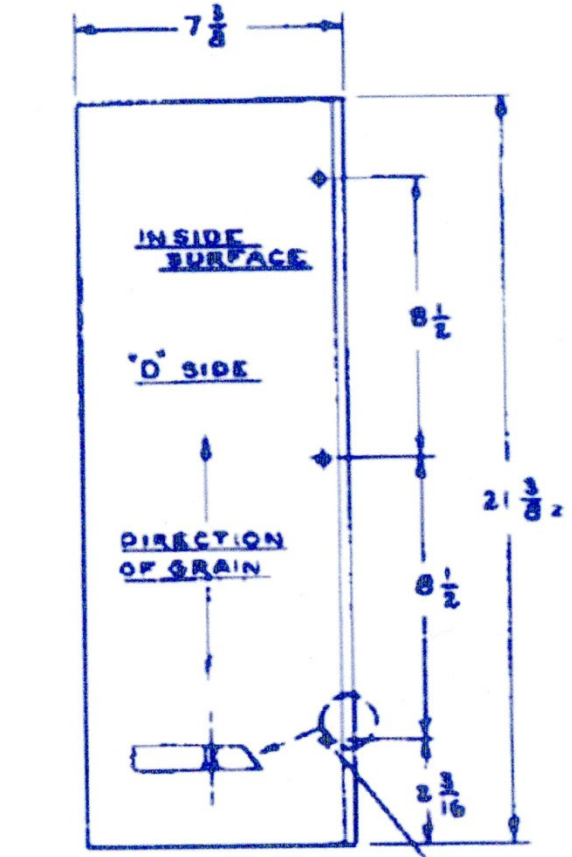

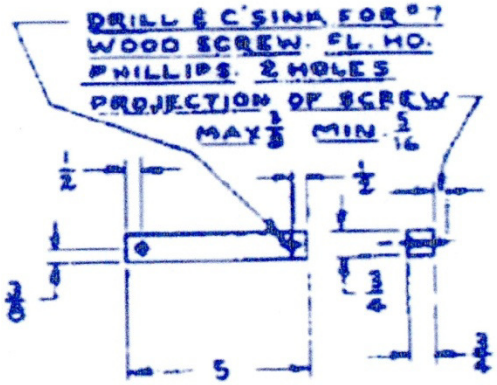

(9) 2 REQ'D POPLAR, SOLID

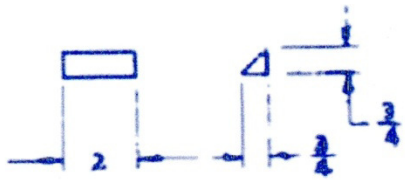

(15) 6 REQ'D, POPLAR, SOLID

10°

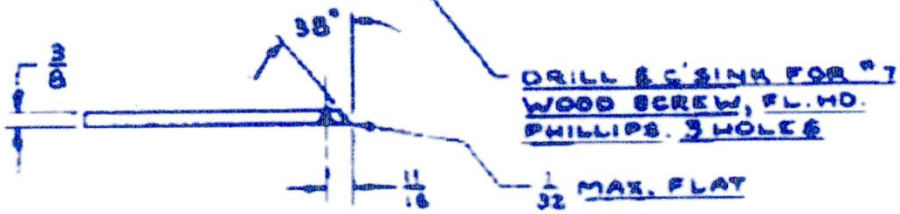

38°

(12) 2 REQ'D FIR PLYWOOD B-D OR BETTER

1/6

LOWER BAFFLE

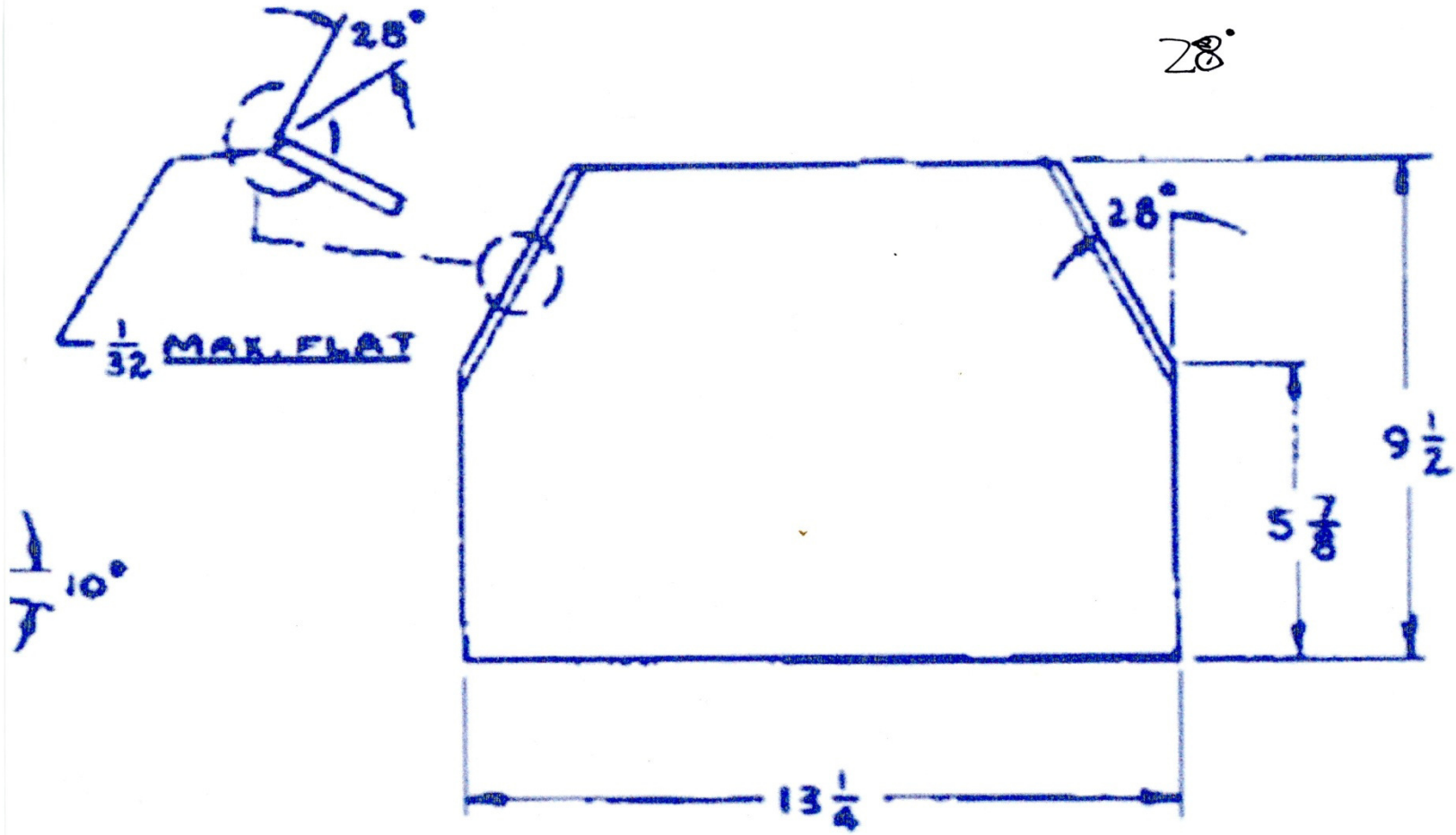

(11) ONE REQ'D, 3/8 FIR PLYWOOD B-D OR BETTER

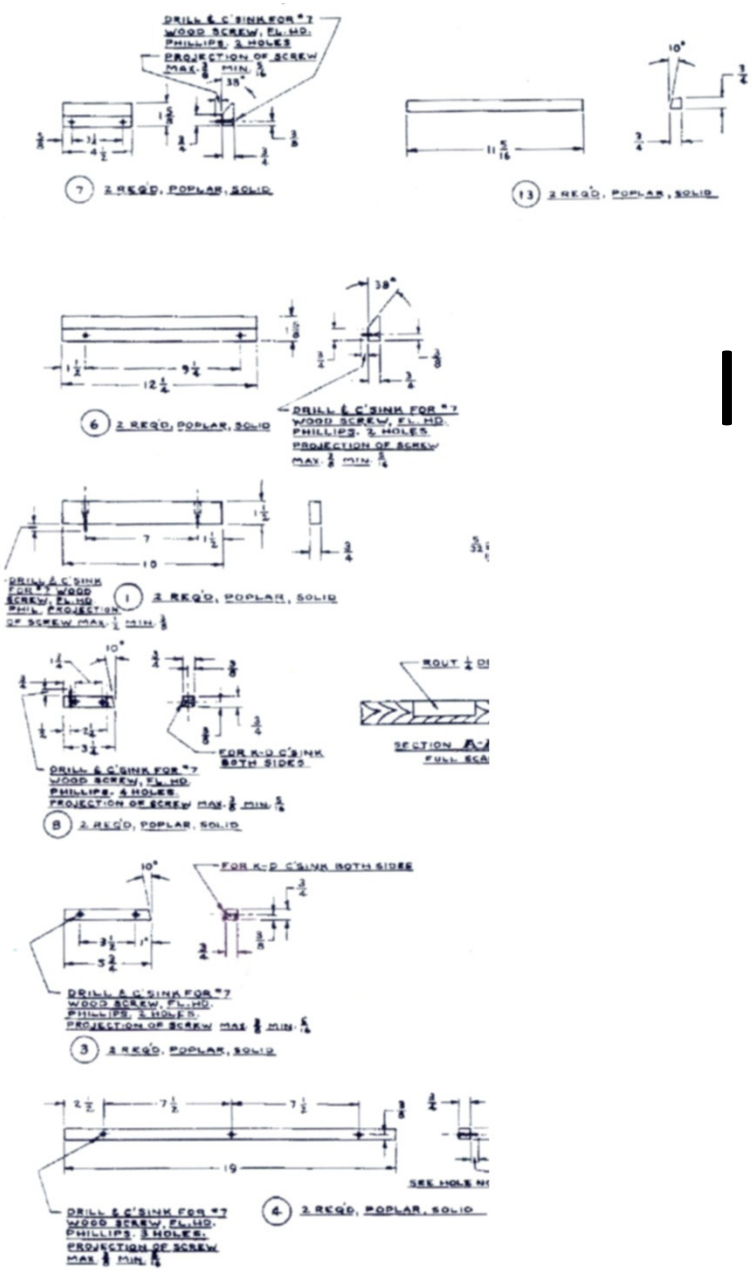

I decided that job one was to cut all of the smaller support pieces.

Then the larger main pieces

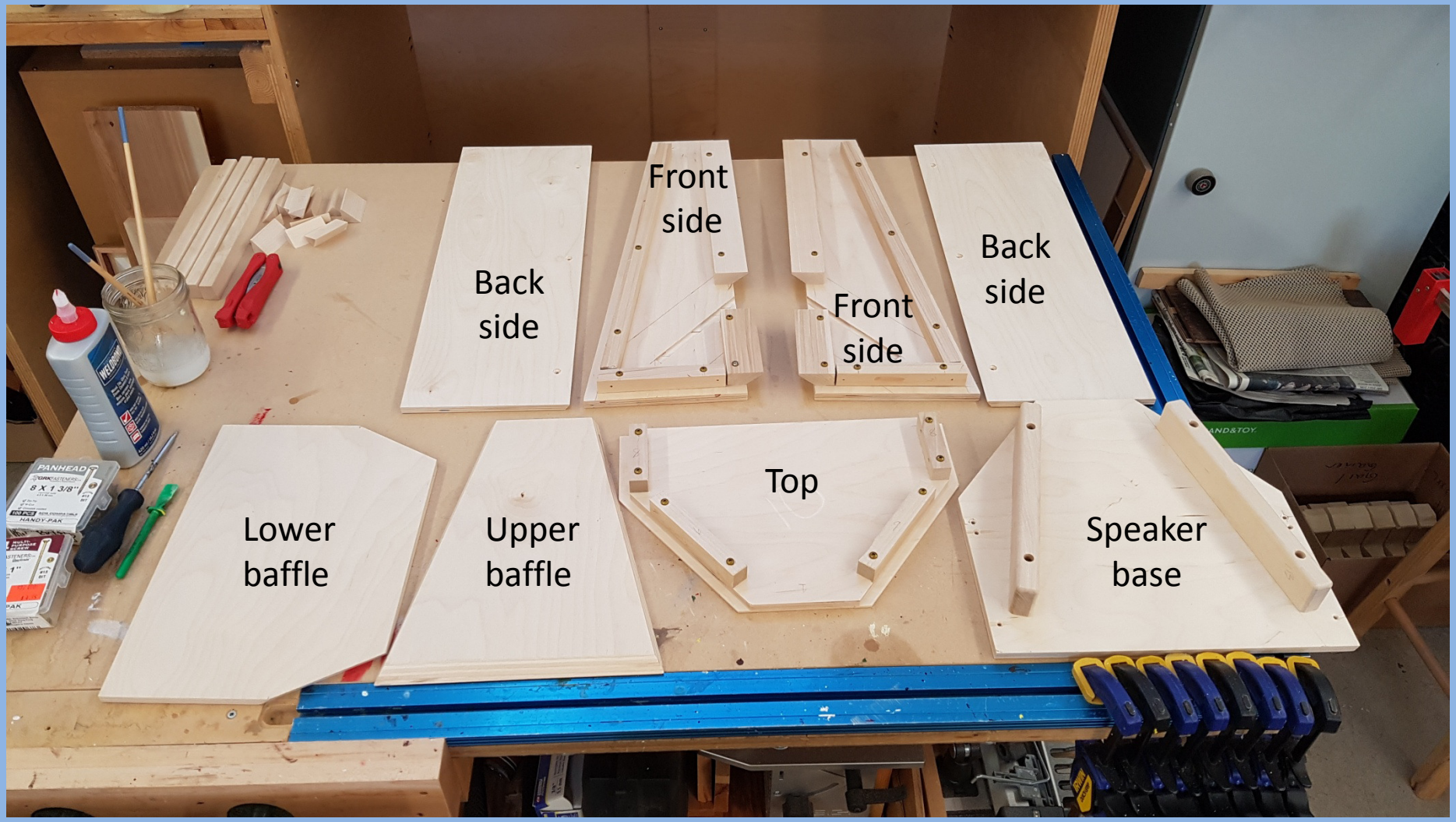

Upper Baffle was the most difficult to cut. Note all the angles to cut.

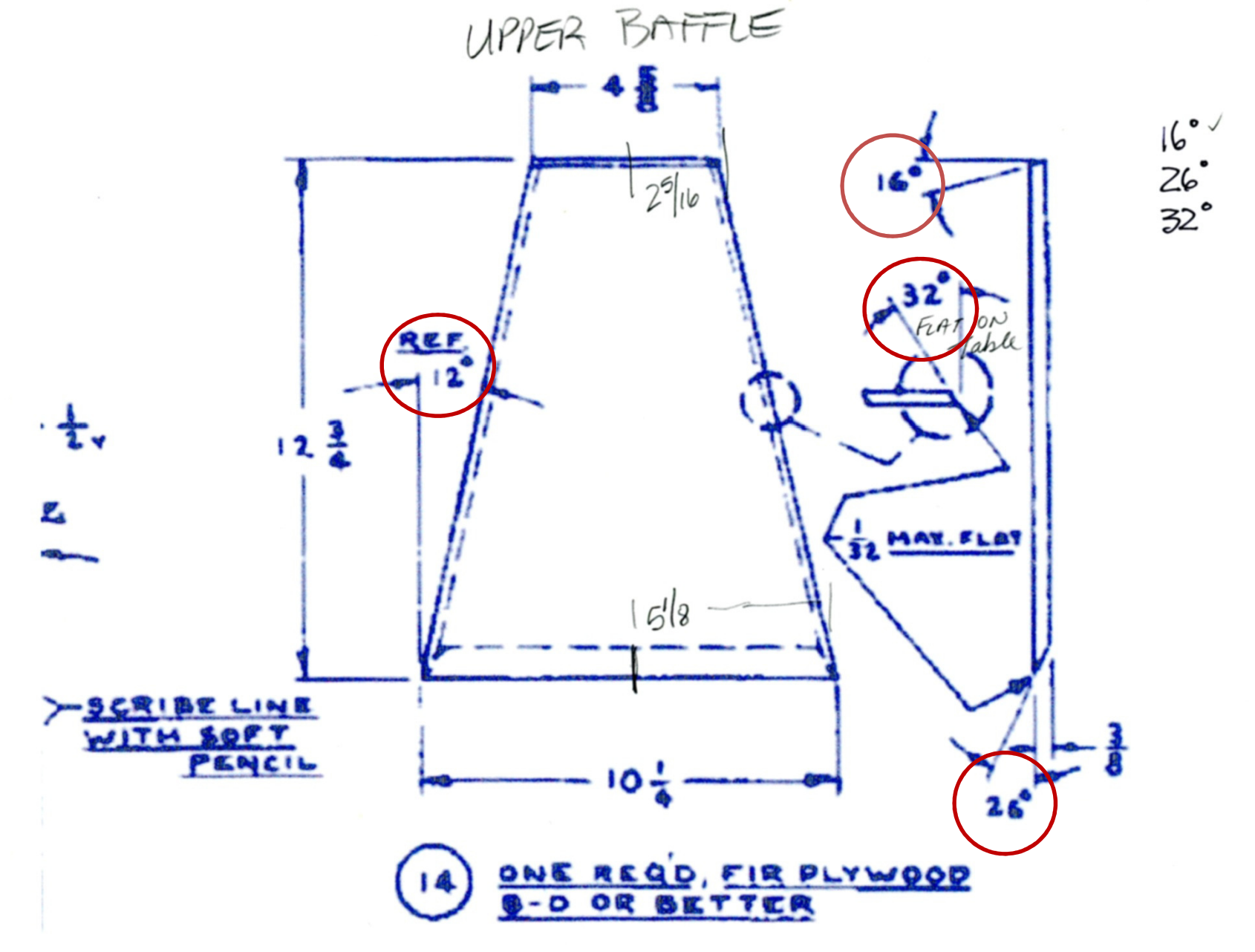

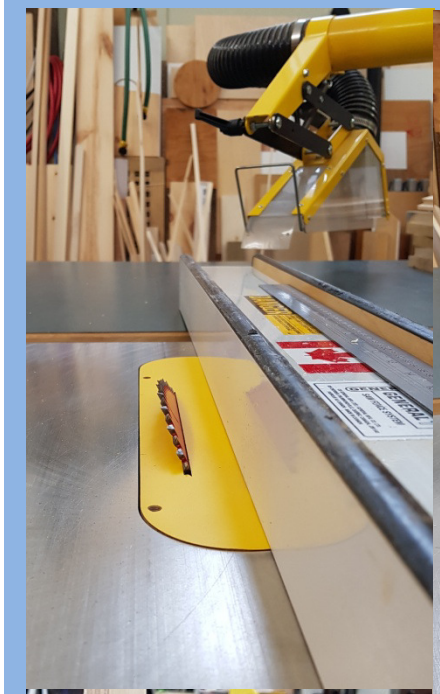

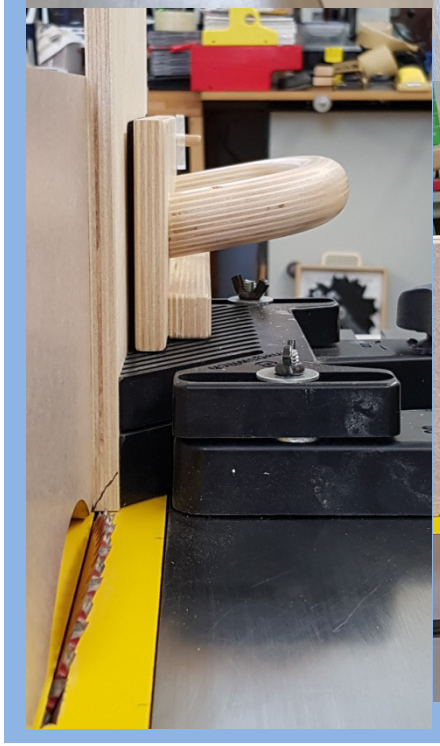

Setup to cut the 26° angle on the bottom of the Upper Baffle.

Note the custom throat plate to accommodate the angle. On a test cut on scrap piece the plywood was falling through the slot of the standard metal throat plate. The custom throat plate stopped this from happening.

Custom taper jig to cut the Front Sides

Jig to cut final angles on the Cabinet Tops

Only discovered this jig on the net when it came to cut the angle on the tops. All the other angle cuts on the bottom, lower baffle and upper baffle were cut using the mitre gauge, sighting down the blade and making test cuts. A test cut, then measured between the cut and the lay out line at the top and bottom of the cut. If the distance was the same, then I snuck up to the lay out line. It was a painful process! This jig would have saved a lot of time.

Cutting the dado in the Front Sides for the lower Baffle

Completed dados in the Front Sides
To hold the lower Baffle

Cutting the hole in the speaker panel

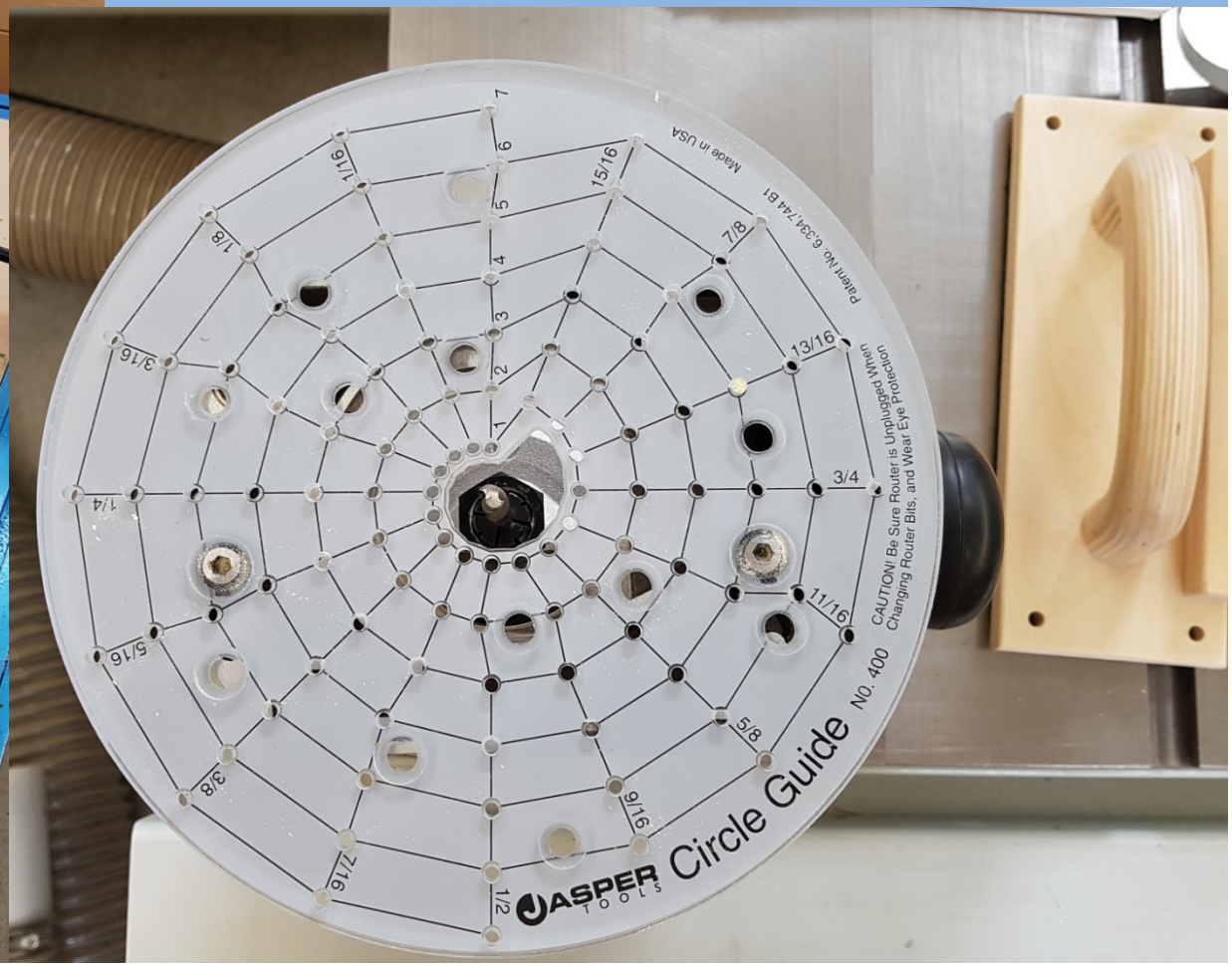

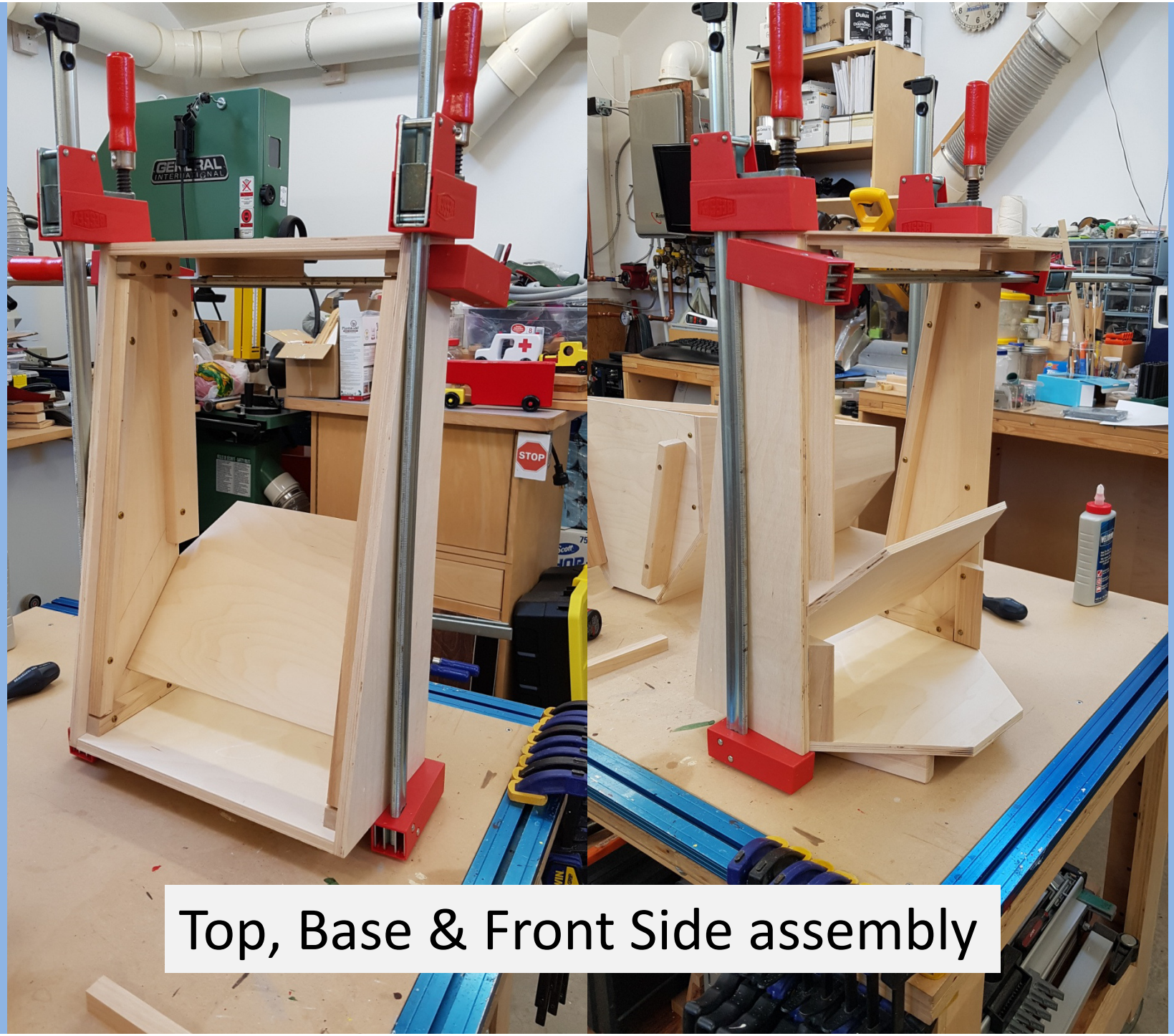

Top, Base & Front Side assembly

Glue-up of the Upper Baffle. Applied glue to 4 edges and set in with weights to set.


Plans called for sound deadening material. I used Roxul covered with T-shirt material so that fibers do not come out of the back with the movement of air.

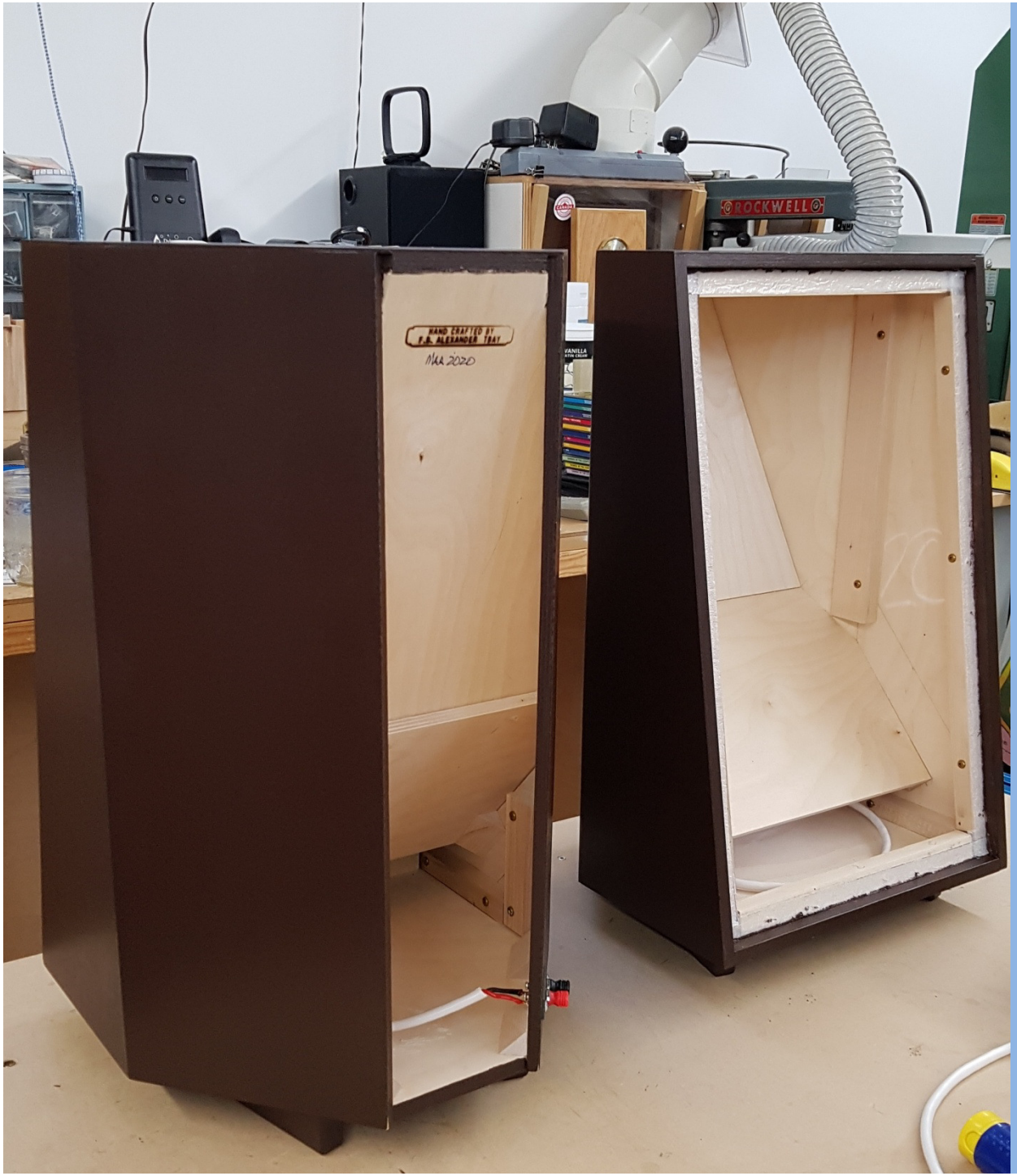

Baronet speaker cabinets with final finish.


GENERAL
INTERNATIONAL